PM Stepper Motor

2P15180-016

General specification	
Step angle accuracy	+/- 8% (full step, no load)
Resistance accuracy	+/-5%
Inductance accuracy	+/- 20%
Temperature rise	80˚C Max. (Rated current, 2 phase on)
Ambient temperature	20˚C ~+ 50˚C
Insulation resistance	100MΩ Min, 500VDC
Dielectric strength	500VAC / minute
Shaft Radial play	0.06 Max. (450g-load)
Shaft Axial play	0.08 Max. (450g-load)
Insulation Class	E for Coils

Specification

Model	Voltage	Phase	Current	Step angle	Resistance at 25C	Holding torque	Pull in Torque	Pull out Torque
	(v)		(A)	(degree)	(Ω)	(min. gf.cm)	(min. gf.cm)	(min. gf.cm)
2P15180-016	5.0	2	0.16	18	30	25		

Outline Drawing

Dimension (Units:mm)

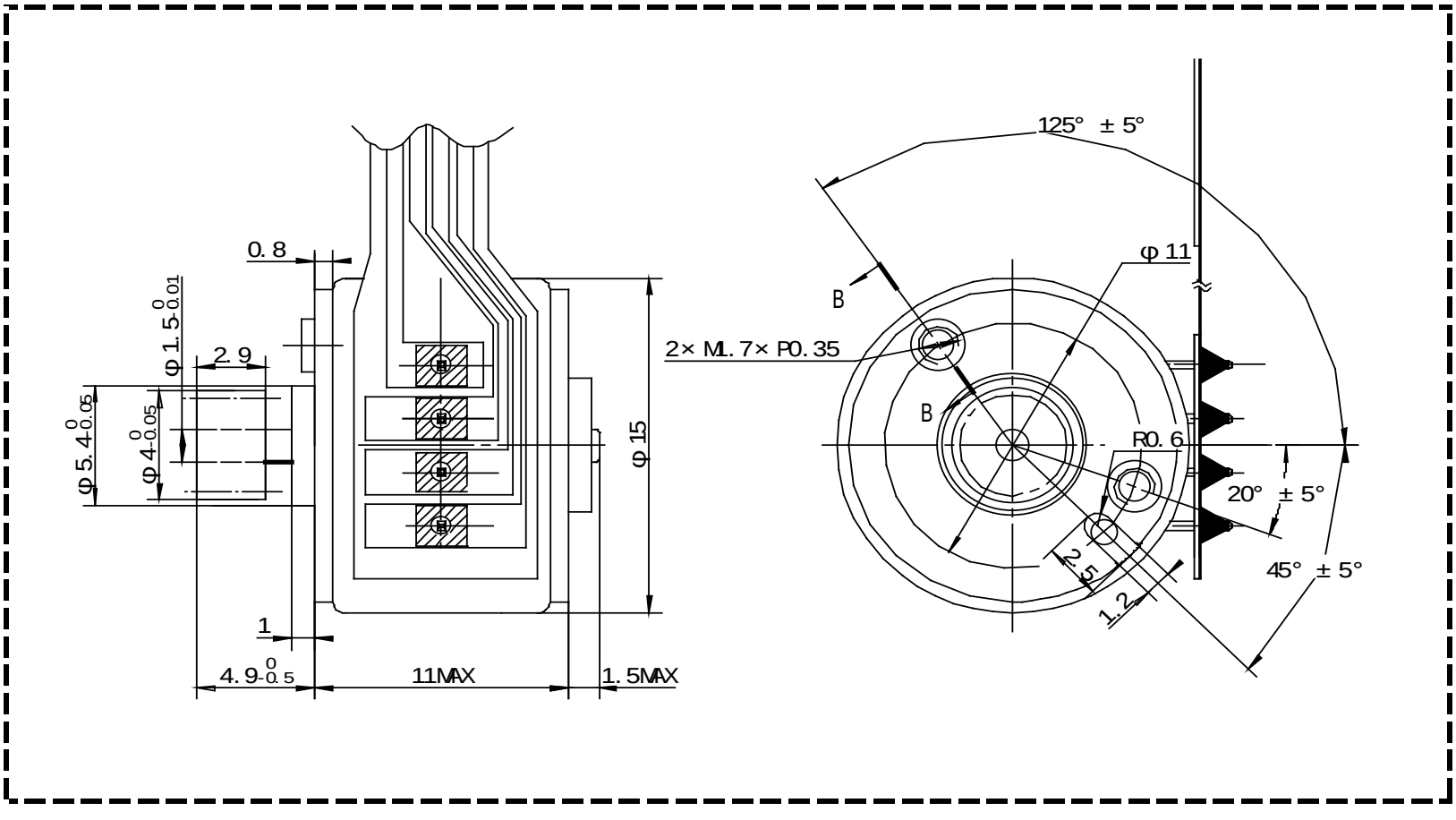

Performance Curve

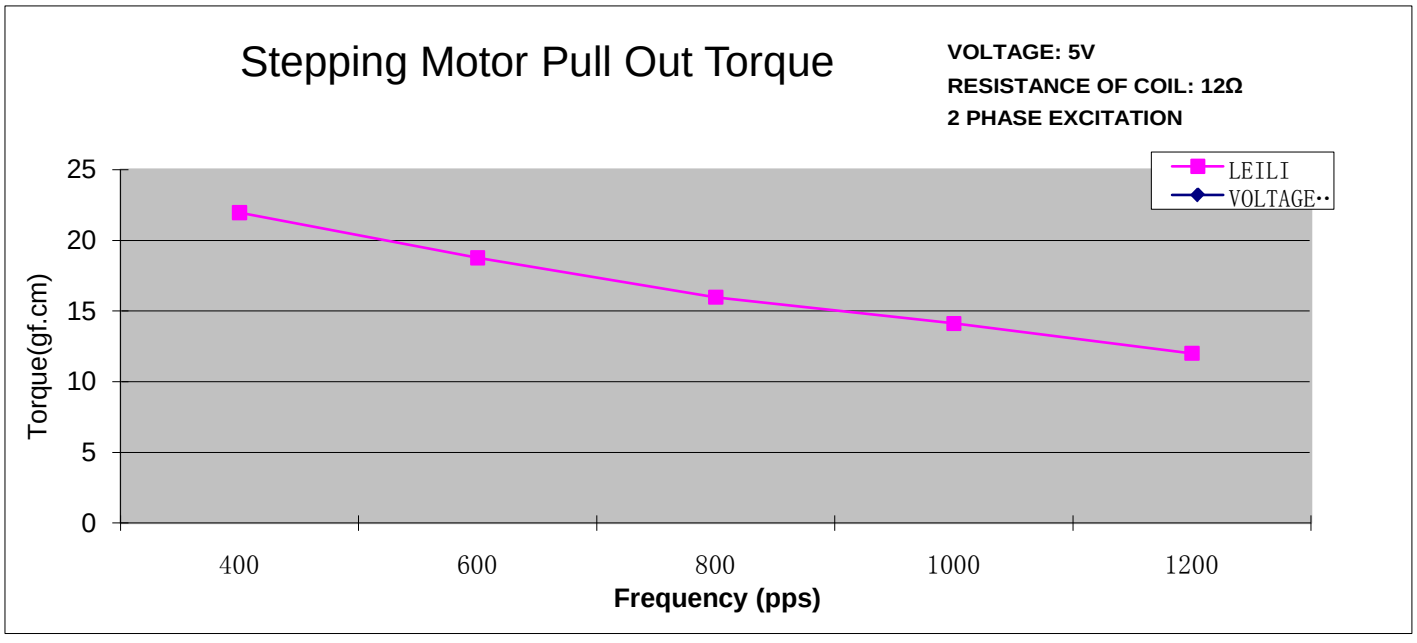

TELCOMotion™ POWERING YOUR DESIGN

9812 Whithorn Dr., Houston, TX 77095, Phone: 281.855.2218, Fax: 281.859.8825, Email: motors@telcointercon.com